SUGGESTED INSTALLATION FOR MODEL SLIPWAY 1/72 PUFFER OR DRIFTER

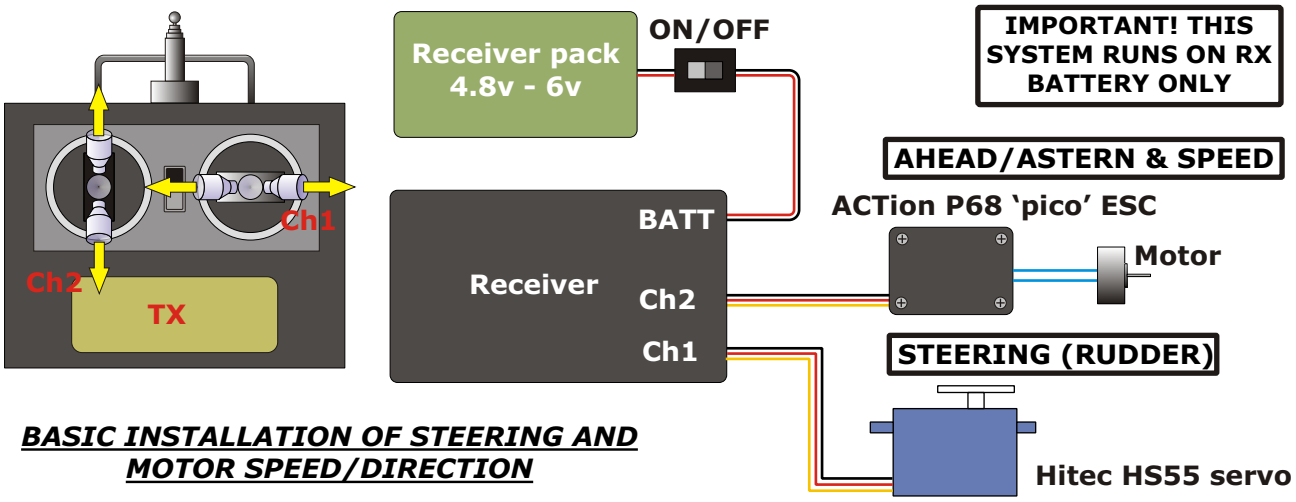

BASIC INSTALLATION OF STEERING AND MOTOR SPEED/DIRECTION

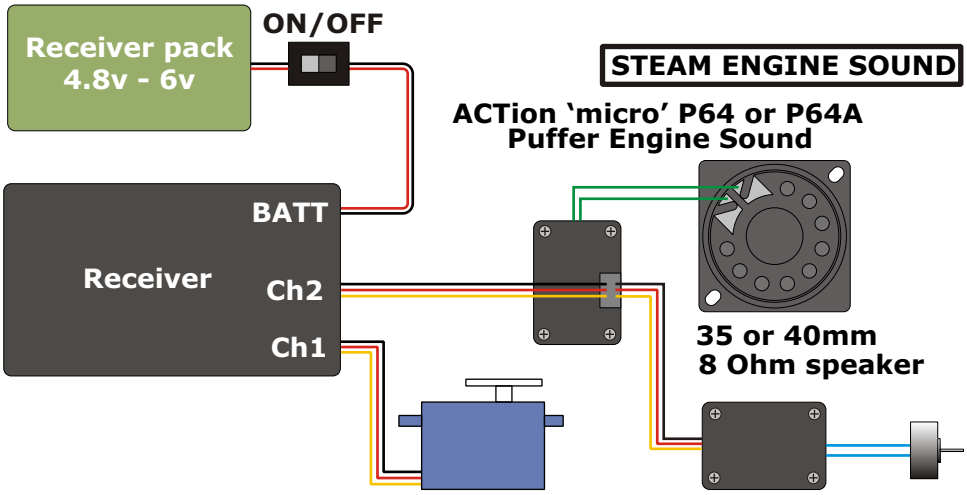

ADDING STEAM ENGINE (P64) OR PUFFER ENGINE SOUND (P64A)

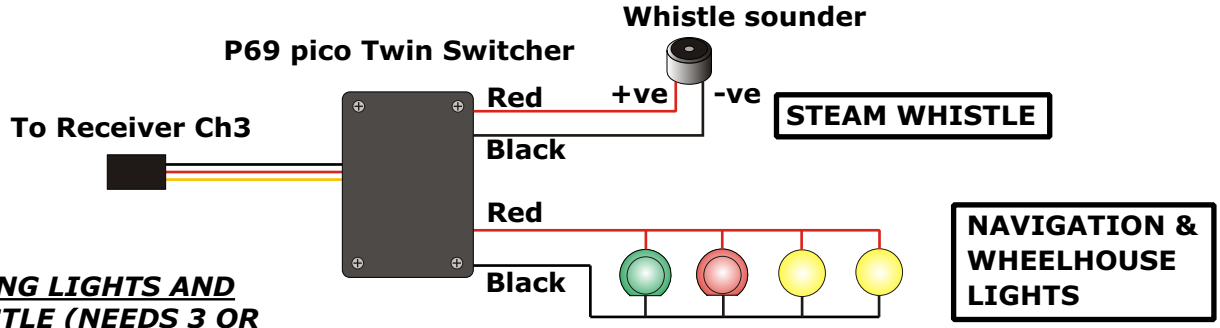

ADDING LIGHTS AND WHISTLE (NEEDS 3 OR MORE CHANNEL RADIO)

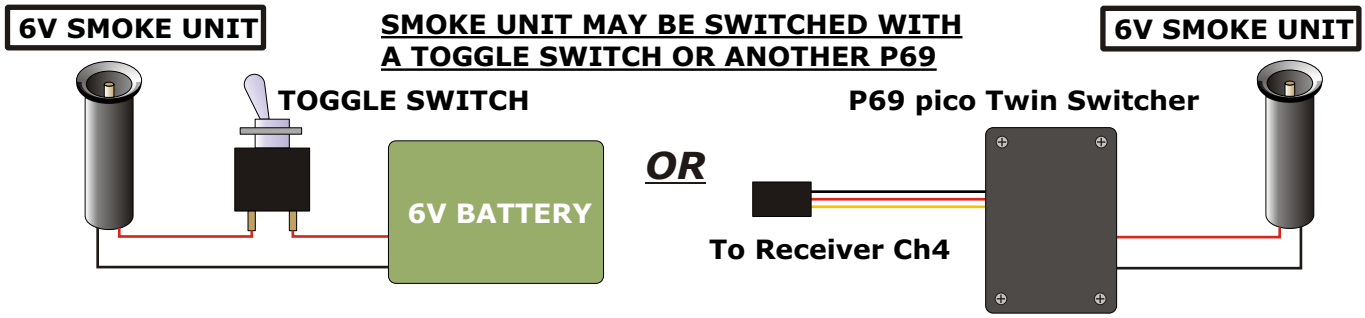

ADDING SMOKE UNIT

© Action R/C Electronics

Drawn by Dave Milbourn