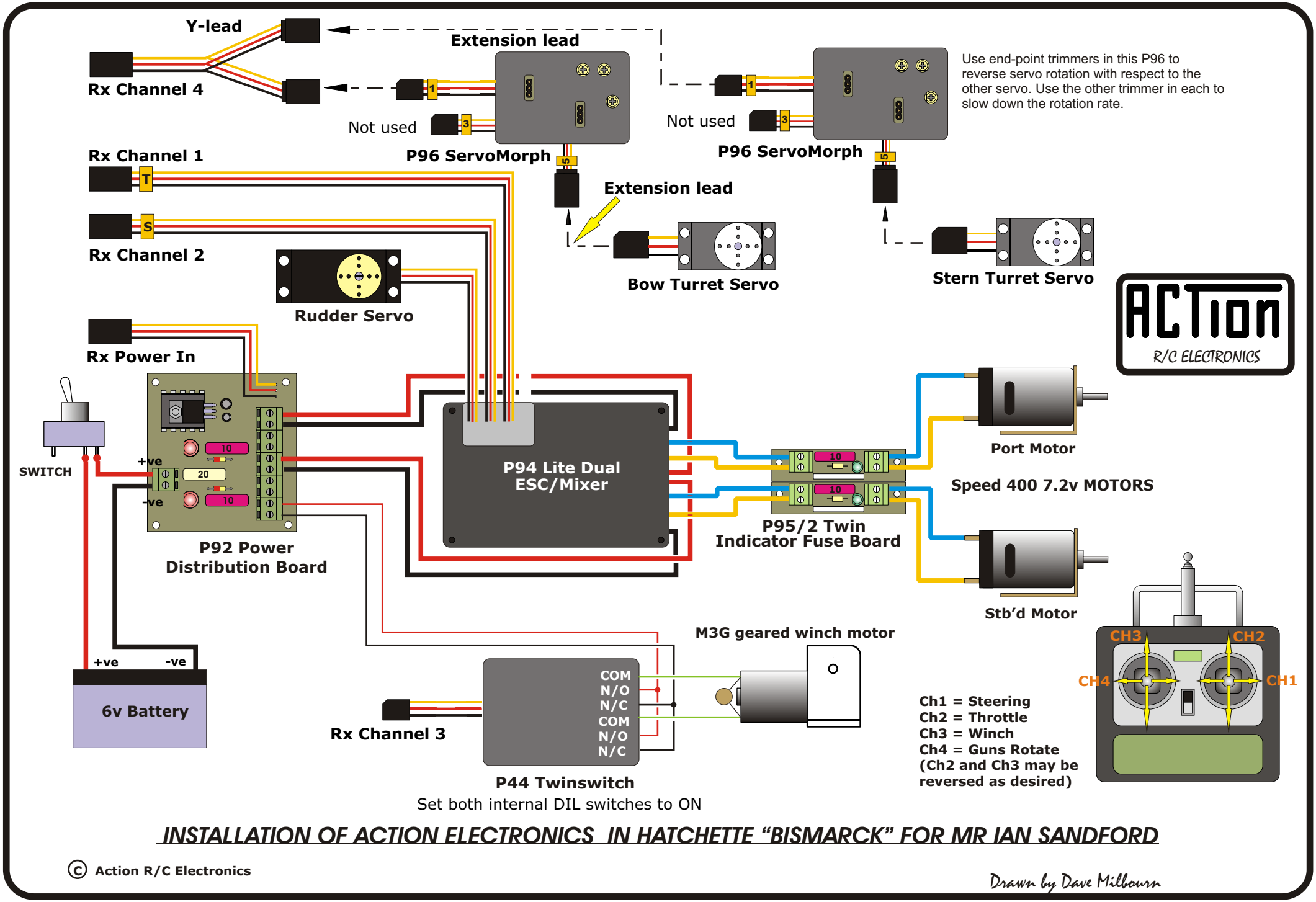

INSTALLATION OF ACTION ELECTRONICS IN HATCHETTE "BISMARCK" FOR MR IAN SANDFORD

© Action R/C Electronics

Drawn by Dave Milbourn