INSTALLATION OF ACTION UNITS IN MODEL SLIPWAY "AZIZ" FOR MR KEITH NICHOLAS

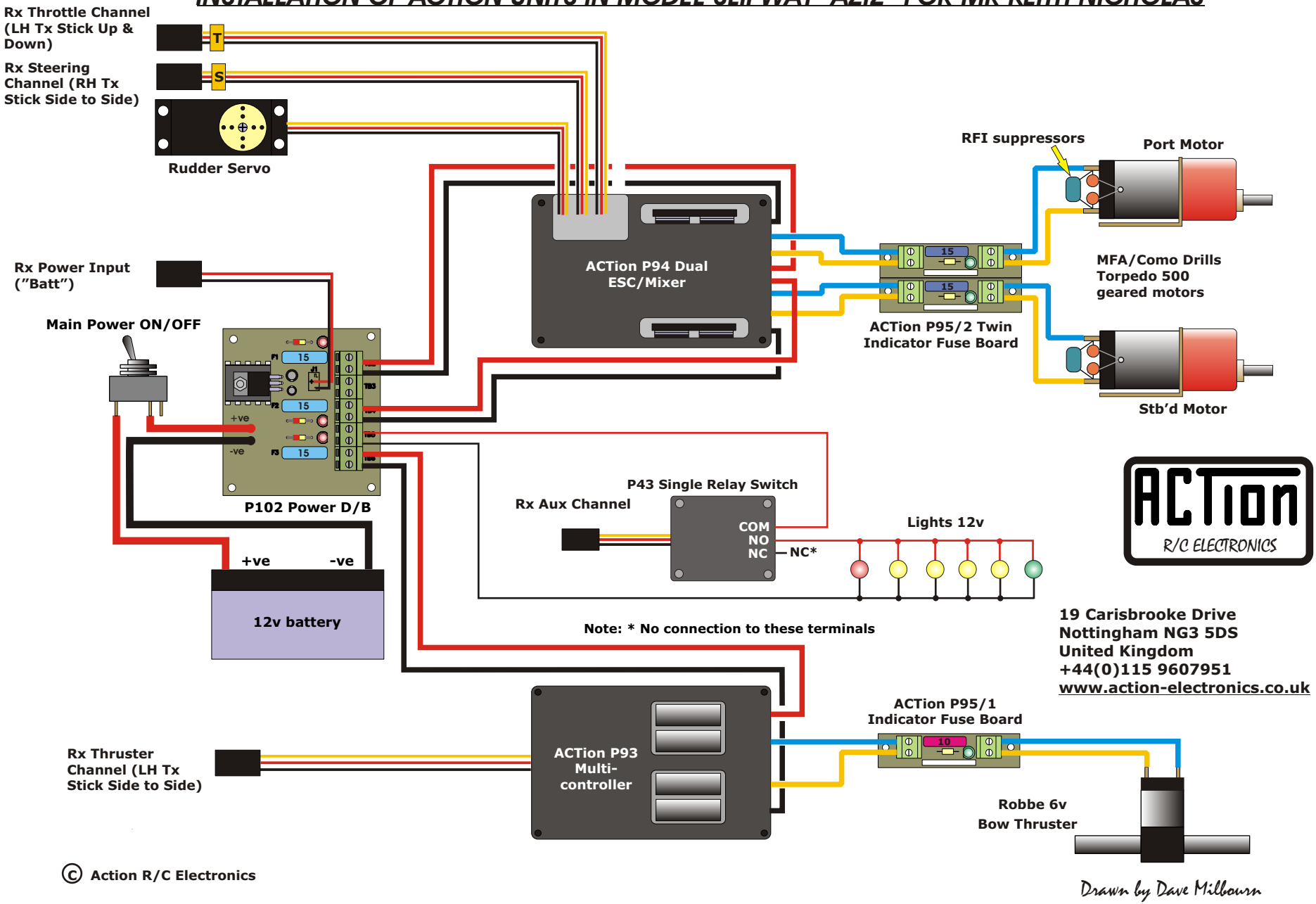

ACTion
R/C ELECTRONICS

19 Carisbrooke Drive
Nottingham NG3 5DS
United Kingdom
+44(0)115 9607951
www.action-electronics.co.uk

© Action R/C Electronics

Drawn by Dave Milbourn